Dallas Research PoP

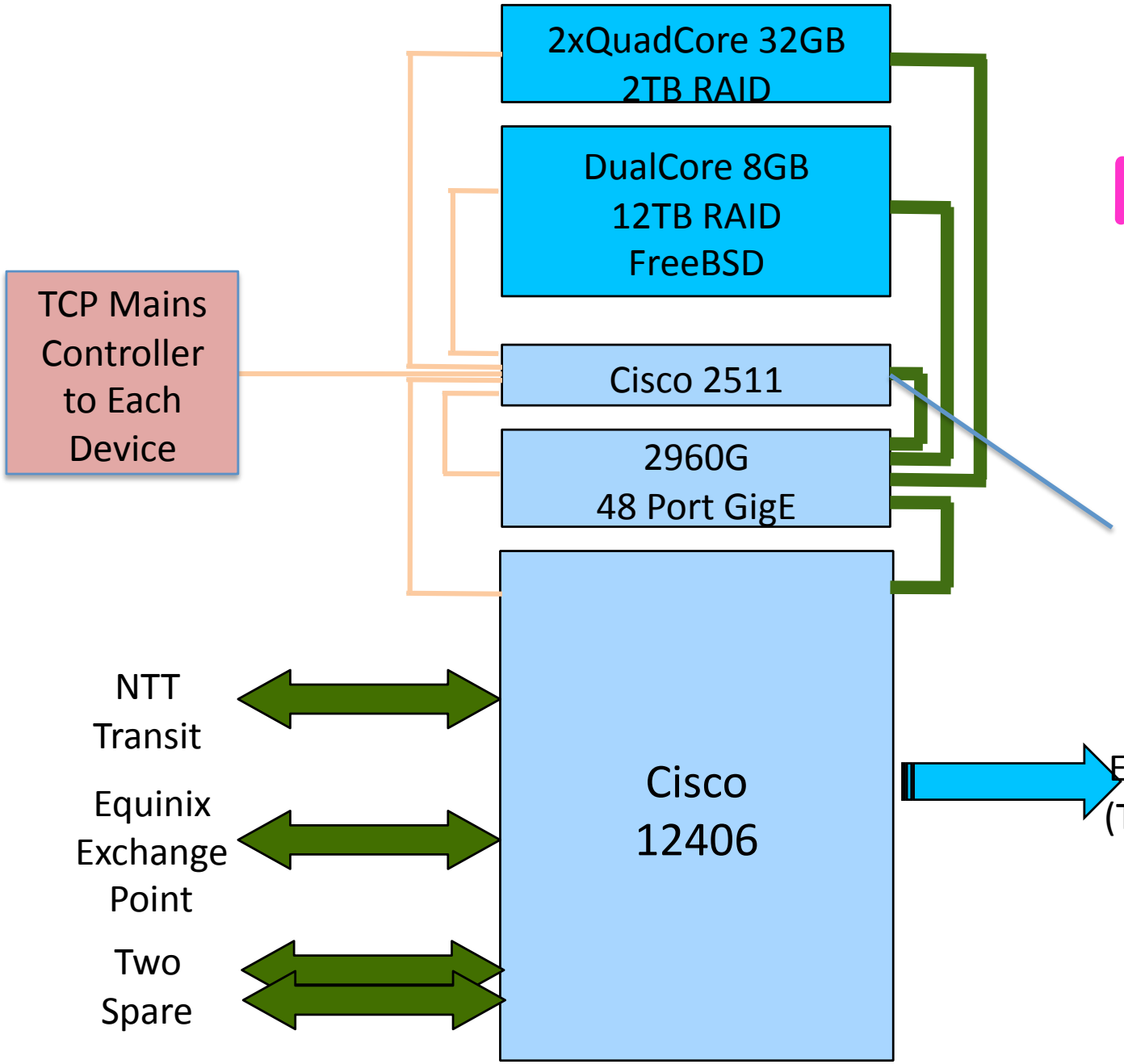

OOB to 2511 Console
- Dial-up
- DSL
- PPP
- Ether (someone else's)
- 3G/HSPDA/...