Security & Cryptographic Methods

AfNOG 2007

April 25-26, 2007
Abuja, Nigeria

Hervey Allen

Core Security Principals

What are they?

(1)-- **C**onfidentiality

(2)-- **I**ntegrity

(3)-- **A**uthentication

- Access Control
- Verification

(4)-- **A**vailability

Cryptographic Methods

Critical for *confidentiality*, *integrity*, and *authentication*.

Indirectly they lead to better *availability*.

What are some methods and tools?

private keys

public keys

hashes

ssl

ssh

digital signatures

md5/sha1

des/3des/blowfish

pgp...

ciphers

digital certificates

...Do you have any more?

What We'll Cover

- Ciphers
- Hashing (Integrity checks)
- Key generation
- Public/Private Keys
- Digital signatures
- TLS/SSL
- SSH
- PGP

Ciphers

Private Key/Symmetric Ciphers

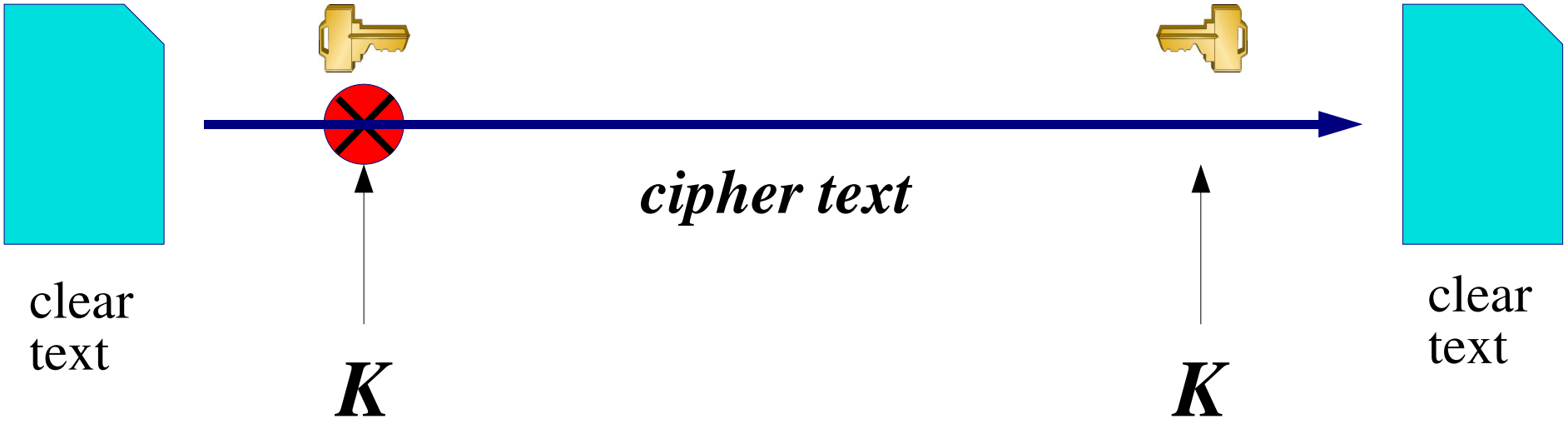

The same key is used to encrypt the document before sending and to decrypt it once it is received

Interception of the Cipher Text

How would they recover the clear text?

- Brute force attack
- Steal the cipher
- Others?

Examples of Symmetric Ciphers

DES - 56 bit key length, designed by US security service

3DES - effective key length 112 bits

AES (Advanced Encryption Standard) - 128 to 256 bit key length

Blowfish - 128 bits, optimised for fast operation on 32-bit microprocessors

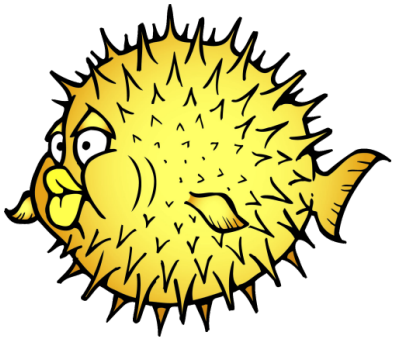

IDEA - 128 bits, patented (requires a licence for commercial use)

Features of Symmetric Ciphers

- Fast to encrypt and decrypt, suitable for large volumes of data
- A well-designed cipher is only subject to brute-force attack; the strength is therefore directly related to the key length
- Current recommendation is a key length of at least 90 bits
  - i.e. to be fairly sure that your data will be safe for at least 20 years
- Problem - how do you distribute the keys?

Symmetric Cipher Key Distribution

So, how do you distribute a symmetric key?

- By hand
- Other?

Hashing

One-Way Encryption

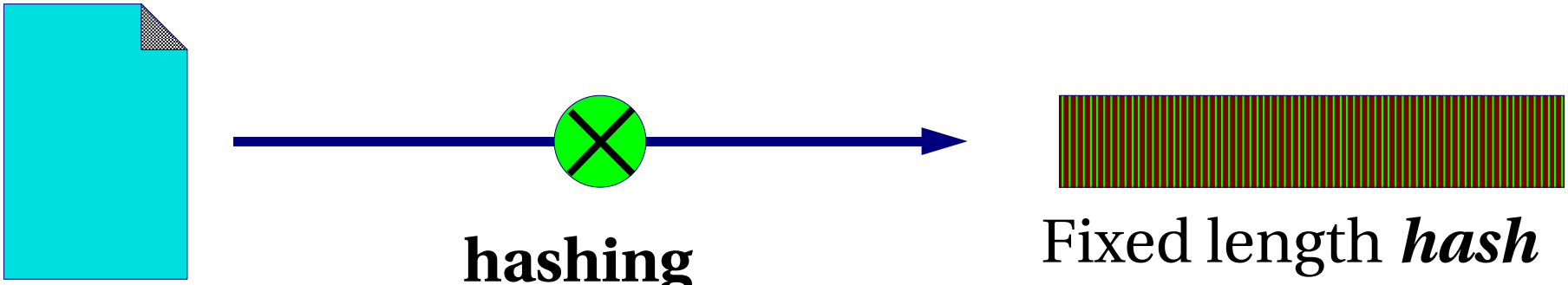

Munging the document gives a short ***message digest*** (checksum). Not possible to go back from the digest to the original document.

Hashing

one-way encryption: another example

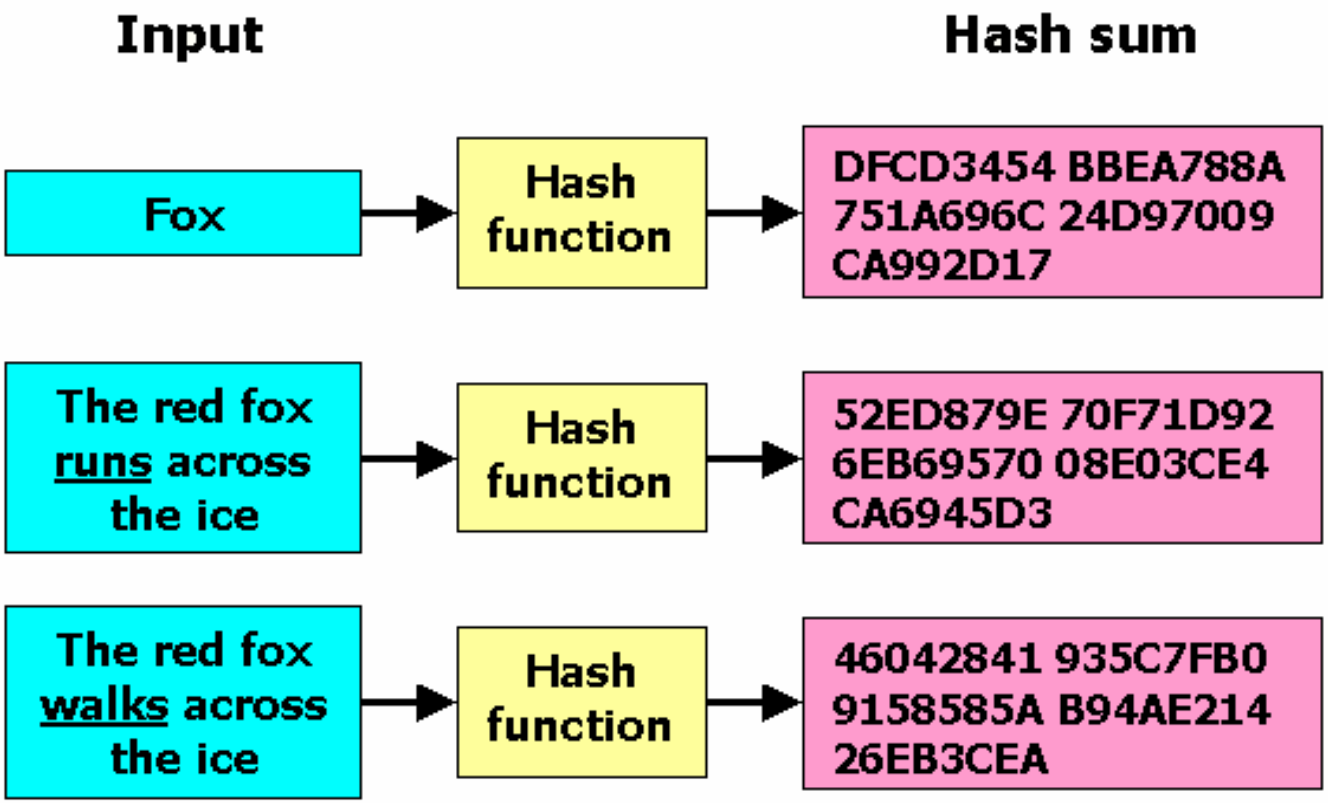

Note the significant change in the hash sum for minor changes in the input. Note that the hash sum is the same length for varying input sizes. This is extremely useful.

*Image courtesy Wikipedia.org.

Examples

- Unix ***crypt***() function, based on DES
- ***MD5*** (Message Digest 5) - 128 bit hash
- ***SHA1*** (Secure Hash Algorithm) - 160 bits
- Until August 2004, no two documents had been discovered which had the same MD5 digest!
  - Such "collisions" are not a major problem as yet
  - No collisions have yet been found in SHA-1
- Still no feasible method to create any document which has a given MD5 digest

q.) So what use is this?
a.) Integrity checks

- You can run many megabytes of data through MD5 and still get only 128 bits to check. It's fast.
- You can run many megabytes of data through SHA-1 and still get only 160 bits to check. It's slower, but more secure.
- An attacker cannot feasibly modify your file and leave it with the same checksum*.

Gives your document a unique "fingerprint"

* Even with the recent attack, at best the attacker could add some corruption and leave the MD5sum unchanged. They could not insert any data of their own choosing.

Exercise

- Exercise: on your machine type

  `cat /etc/motd`

- Look at your neighbour's machine. Is their file *exactly* the same as yours? Can you be sure?

  `md5 /etc/motd` (maybe use sha1sum)

- Compare the result with your neighbour
- Now change ONE (1) character in /etc/motd and repeat the md5 test (use *vi* or *joe* to edit the file)

  Note: Under Linux the command is md5sum

Software announcements often contain an MD5 checksum

It's trivial to check

Protects you against hacked FTP servers and download errors

```
$ md5 exim-4.43.tar.bz2
MD5 (exim-4.43.tar.bz2) = f8f646d4920660cb5579becd9265a3bf
$
```

Could the attacker have modified the announcement E-mail as well?

q.) So what use is this?
a.) Encrypted password storage

- We don't want to keep cleartext passwords if possible; the password file would be far too attractive a target
- Store hash(passwd) in /etc/master.passwd
- When user logs in, calculate the hash of the password they have given, and compare it to the hash in the password file
- If the two hashes match, the user must have entered the correct password
- Can an attacker still recover the password?

q.) So what use is that?
a.) Generating encryption keys

- Users cannot remember 128 bit binary encryption keys
- However they can remember "passphrases"
- A hash can be used to convert a passphrase into a fixed-length encryption key
- The longer the passphrase, the more "randomness" it contains and the harder to guess. English text is typically only 1.3 bits of randomness per character.

http://axion.physics.ubc.ca/pgp-attack.html

http://www.iusmentis.com/technology/encryption/pgp/pgpattackfaq/

http://www.schneier.com/paper-personal-entropy.html

Generating Encryption Keys

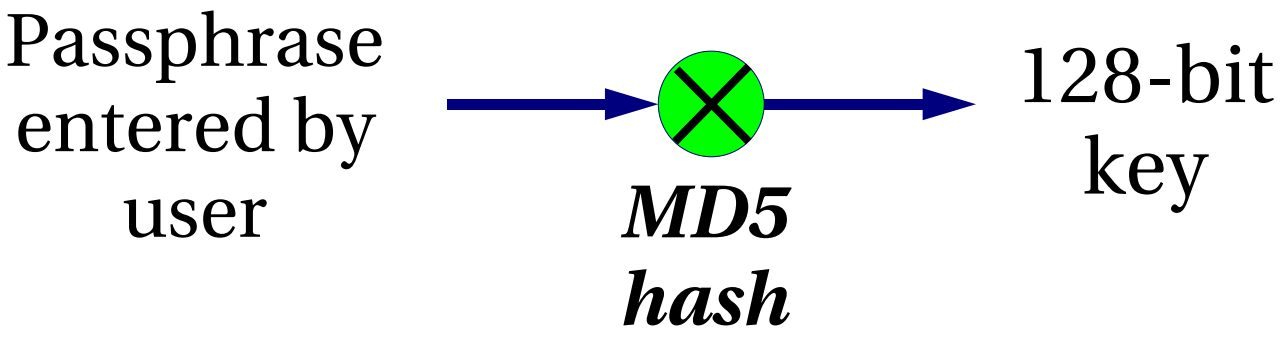

- Every passphrase generates a different 128-bit key
- Repeat with SHA-1 to get different 160-bit keys

Sample Symmetric Cipher Creation Using PGP*

```
# vi foobar.txt
# gpg -c foobar.txt
Enter passphrase: ding/dong 479 fruitbat
Repeat passphrase: ding/dong 479 fruitbat
# ls foobar.txt*
foobar.txt  foobar.txt.gpg
# rm foobar.txt
rm: remove regular file `foobar.txt'? y

# gpg foobar.txt.gpg
gpg: CAST5 encrypted data
Enter passphrase: ding/dong 479 fruitbat

cat foobar.txt
```

("gpg --version" shows the ciphers available)

(* What does “PGP” stand for?)

Example (Public Key): GPG With Symmetric Cipher

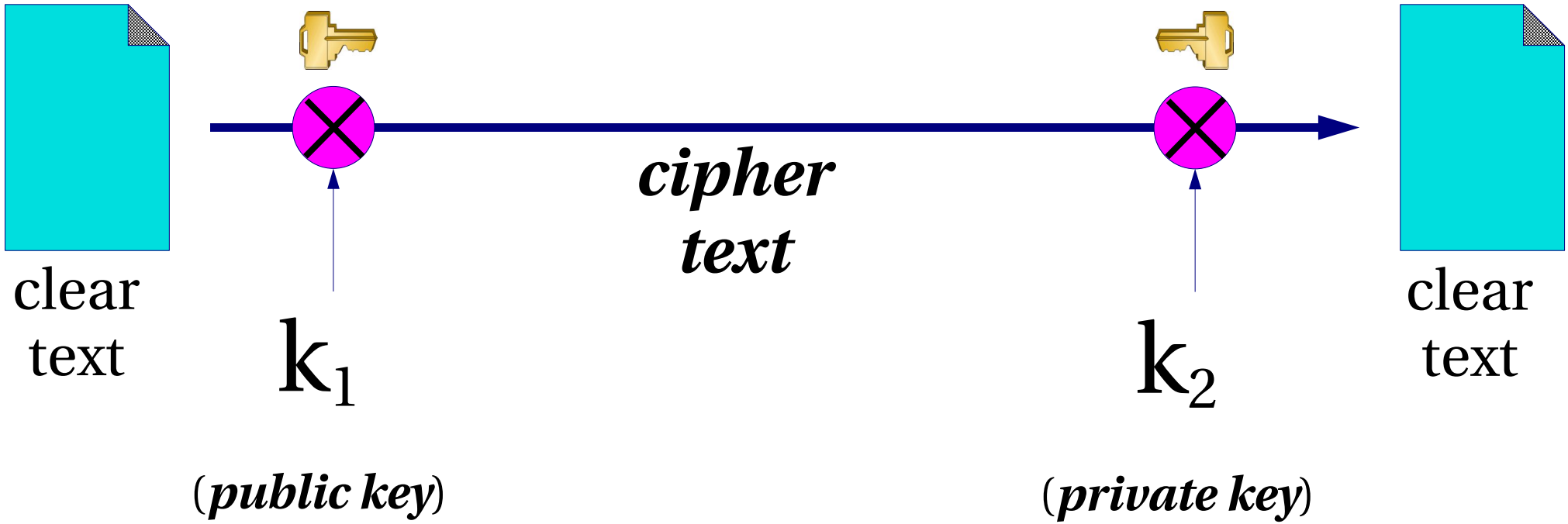

One key is used to encrypt the document,
a different key is used to decrypt it.
This is a big deal!

Public key and Private key

- The Public key and Private key are mathematically related (generated as a pair)
- It is easy to convert the Private key into the Public key. It is not easy to do the reverse.
- Key distribution problem is solved: you can post your public key anywhere. People can use it to encrypt messages to you, but only the holder of the private key can decrypt them.
- Examples: RSA, Elgamal (DSA)

Use for Authentication: Reverse the Roles of the Keys

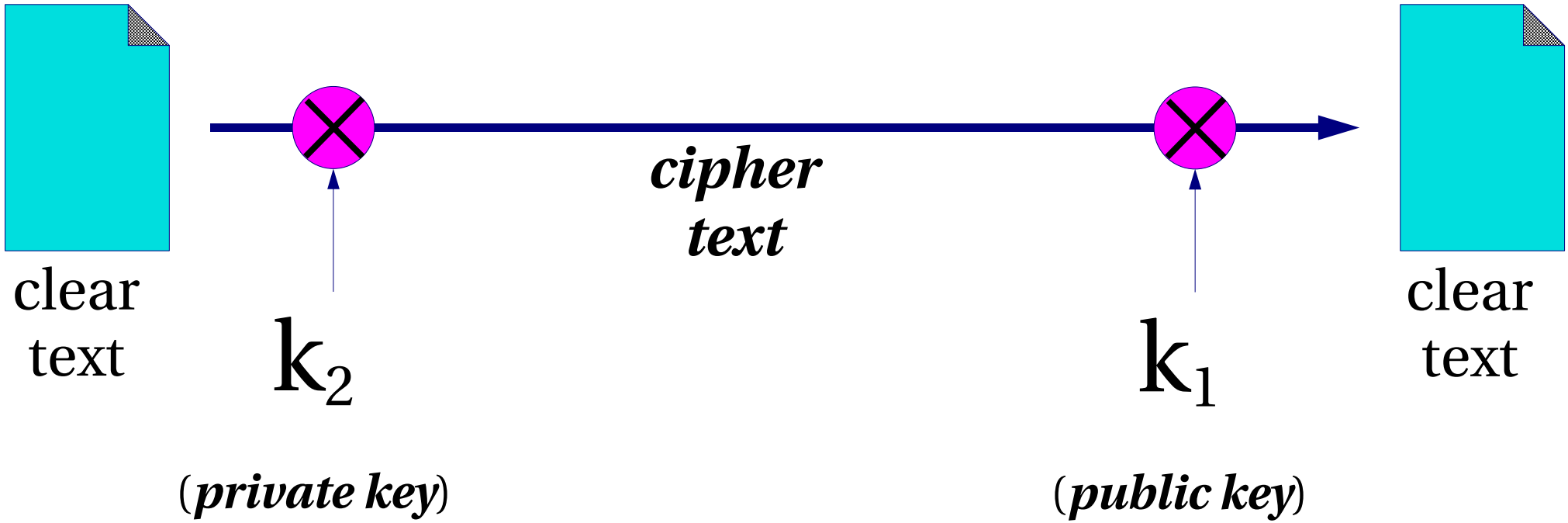

If you can decrypt the document with the public key, it proves it was written by the owner of the private key (and was not changed).

Key Lengths

- Attacks on public key systems involve mathematical attempts to convert the public key into the private key. This is more efficient than brute force.
- 512-bit has been broken
- *Recent developments suggest that 1024-bit keys might not be secure for long*
- Recommend using 2048-bit keys

Protecting the Private Key

- The security of the private key is paramount: keep it safe!
- Keep it on a floppy or a smartcard?
- Prefer to keep it *encrypted* if on a hard drive
- That means you have to decrypt it (using a ***passphrase***) each time you use it
- An attacker would need to steal the file containing the private key, AND know or guess the ***passphrase***

Protecting the Private Key

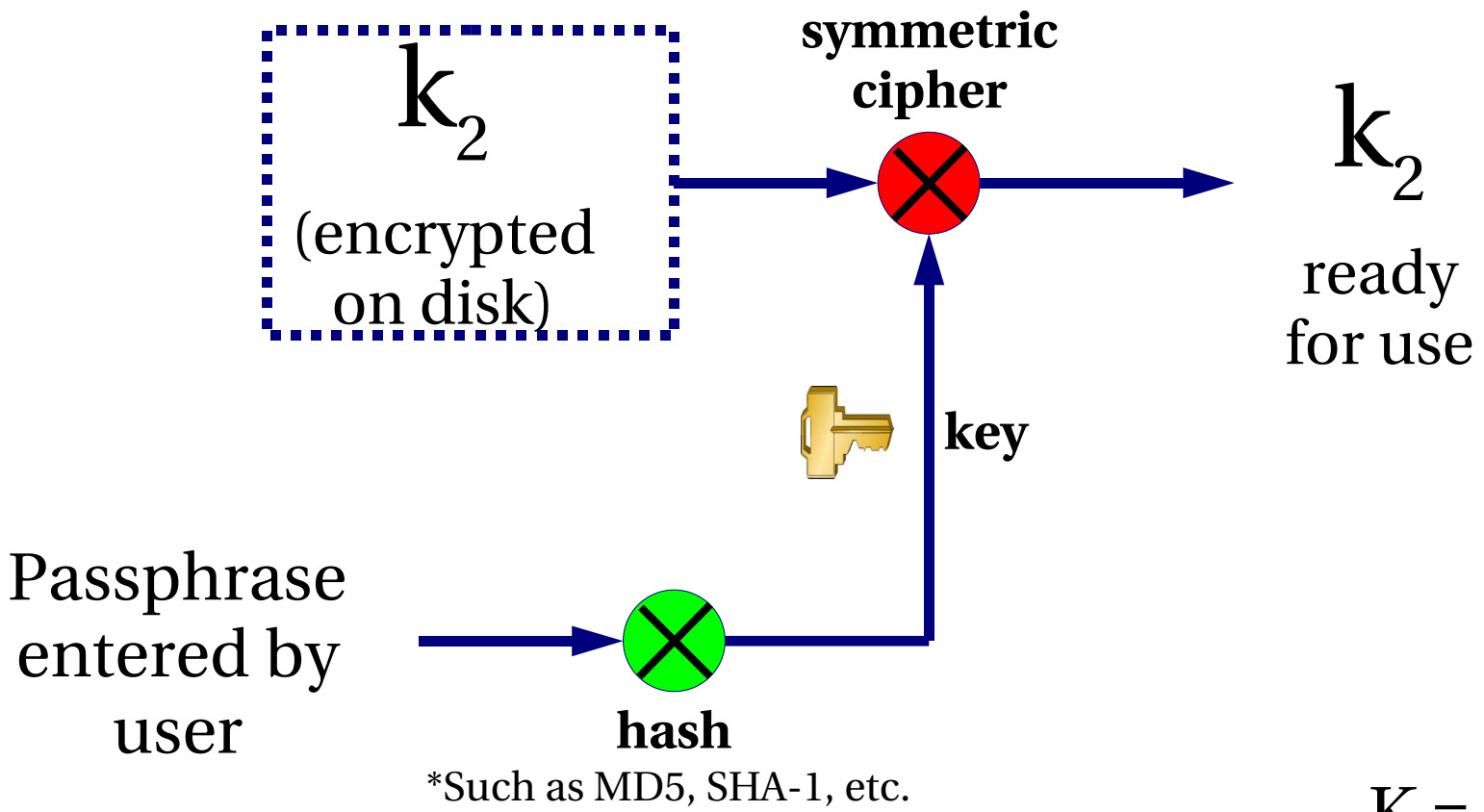

K_2= ***private key***

Questions?

Public Key Cryptosystems are Important

- But they require a lot of computation (expensive in CPU time)
- So we use some tricks to minimise the amount of data which is encrypted

When encrypting:

Use a symmetric cipher with a random key (the "session key"). Use a public key cipher to encrypt the session key and send it along with the encrypted document.

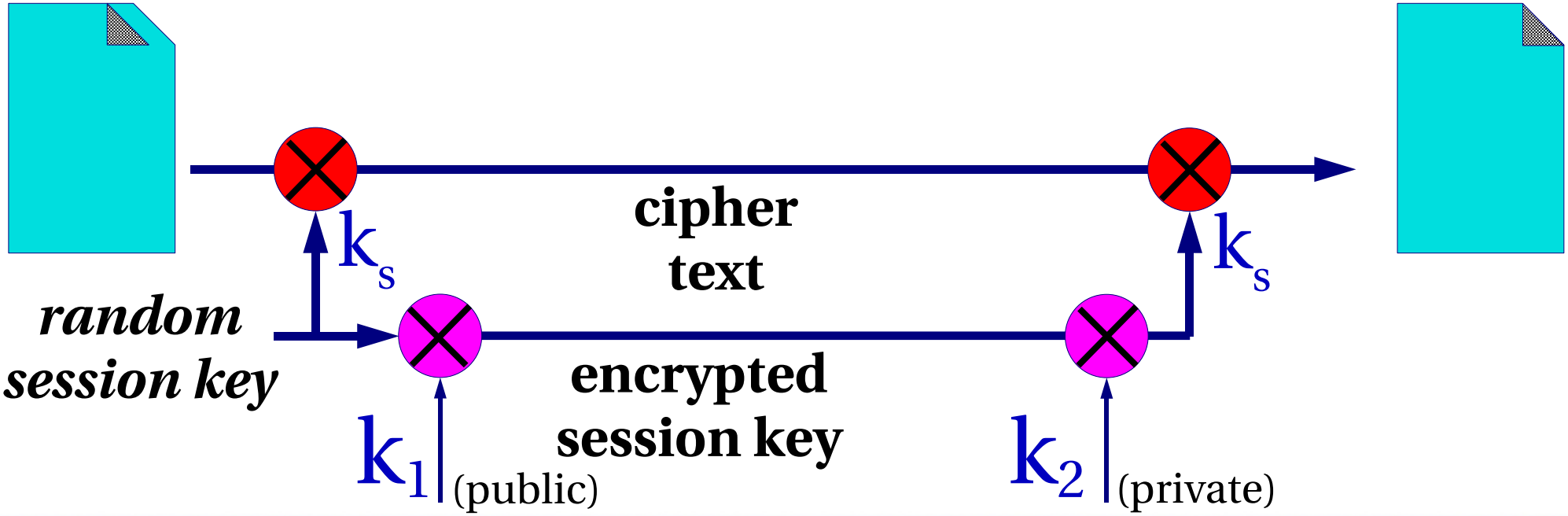

When authenticating:

Take a hash of the document and encrypt only that. An encrypted hash is called a "digital signature"

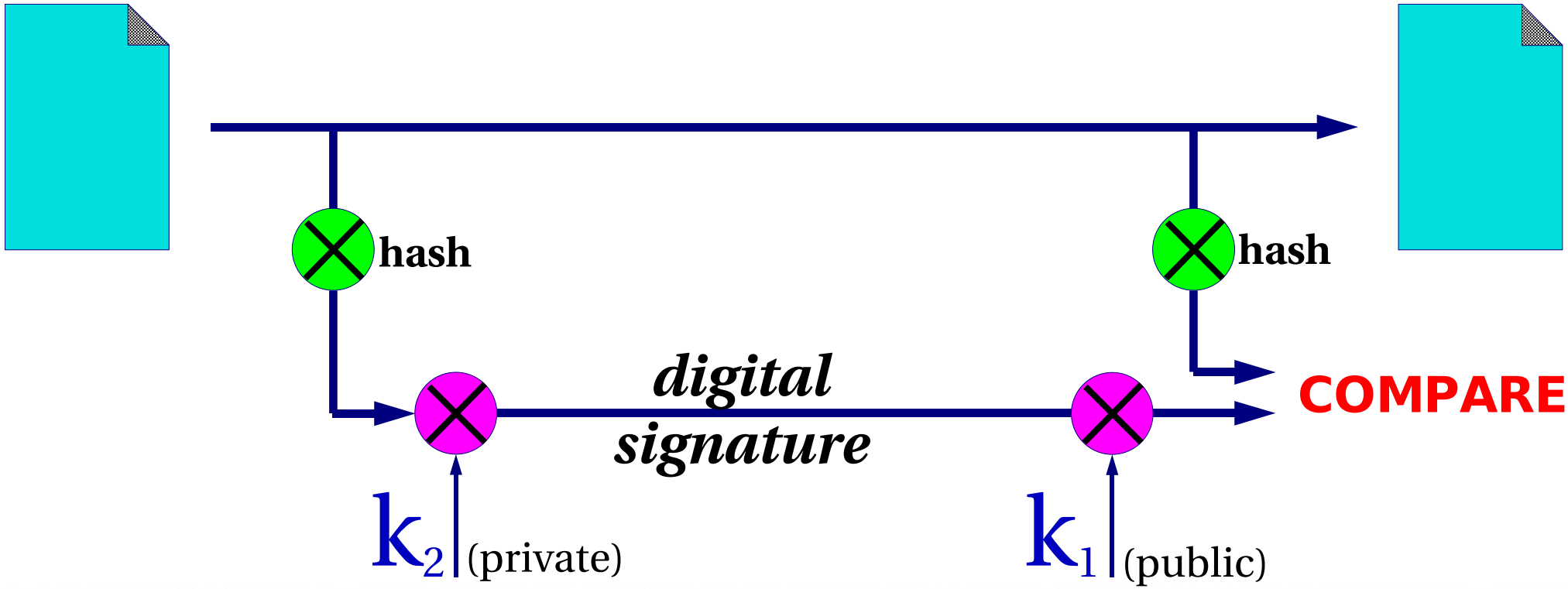

Digital Signatures have many uses, for example:

- E-commerce. An instruction to your bank to transfer money can be authenticated with a digital signature.
  Legislative regimes are slow to catch up
- A trusted third party can issue declarations such as "the holder of this key is a person who is legally known as Alice Hacker"
  Like a passport binds your identity to your face
- Such a declaration is called a "certificate"
- You only need the third-party's public key to check the signature

Do public keys ***really*** solve the key distribution problem?

- Often we want to communicate securely with a remote party whose key we don't know
- We can retrieve their public key over the network
- But what if there's someone in between intercepting our traffic?

The "man-in-the-middle" Attack

- Passive sniffing is no problem
- But if they can modify packets, they can substitute a different key
- The attacker uses separate encryption keys to talk to both sides
- You think your traffic is secure, but it isn't!

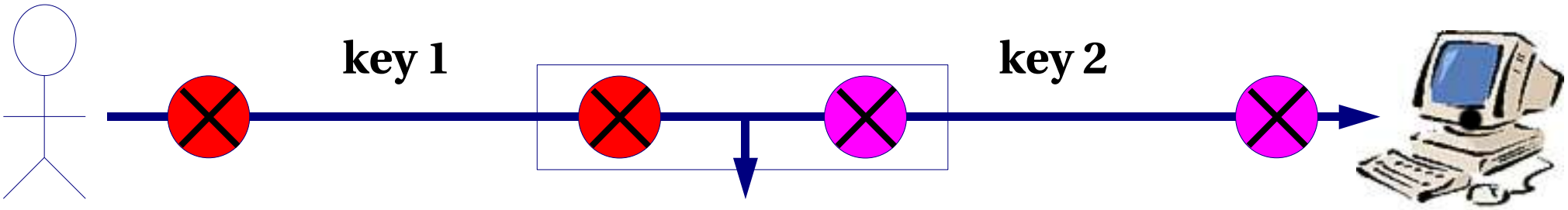

Attacker sees all traffic in plain text - and can modify it!

TLS/SSL – Digital Certificates

Digital Certificates can solve the man-in-the-middle problem

- **Problem:** I have no prior knowledge of the remote side's key, so cannot tell if a different one has been substituted
- But maybe someone else does
- A trusted third party can vouch for the remote side by signing a certificate which contains the remote side's name & public key
- I can check the validity of the certificate using the trusted third party's public key

Example: TLS (SSL) web server with digital certificate

- I generate a private key on my webserver
- I send my public key plus my identity (my webserver's domain name) to a certificate authority (CA)
- The CA manually checks that I am who I say I am, i.e. I own the domain
- They sign a certificate containing my public key, my domain name, and an expiration date
- I install the certificate on my web server

When a client's web browser connects to me using HTTPS:

- They negotiate an encrypted session with me, during which they learn my public key
- I send them the certificate
- They verify the certificate using the CA's public key, which is built-in to the browser
- If the signature is valid, the domain name in the URL matches the domain name in the certificate, and the expiration date has not passed, they know the connection is secure
  - (Q: why is there an expiration date?)

The security of TLS depends on:

- Your webserver being secure
  - So nobody else can obtain your private key
- The CA's public key being in all browsers
- The CA being well managed

  How carefully do they look after their own private keys?
- The CA being trustworthy

  Do they vet all certificate requests properly?

  Could a hacker persuade the CA to sign their key pretending to be someone else? What about a government?

  Do you trust them? Why?

Testing TLS (SSL) Applications

- There is an equivalent of telnet you can use: openssl s_client
- It opens a TCP connection, negotiates TLS, then lets you type data

```
$ openssl s_client -connect ws.edu.isoc.org:443
CONNECTED(00000003)
depth=0 /C=US/ST=Virginia/L=Reston/O=Internet Society/CN=ws.edu.
isoc.org/emailAddress=admin@ws.edu.isoc.org
...
New, TLSv1/SSLv3, Cipher is DHE-RSA-AES256-SHA
---
GET / HTTP/1.0
Host: ws.edu.isoc.org

HTTP/1.1 302 Found
Date: Sat, 01 Jan 2005 15:26:08 GMT
...
```

Limitations of s_client

- Works only for protocols which use TLS from the very beginning of the connection
  - These protocols are identified by using a different port number to the non-encrypted version
  - (HTTP port 80), HTTPS port 443
  - (POP3 port 110), POP3S port 995
- Other protocols start unencrypted and then "upgrade" the connection to encrypted on request
  - e.g. SMTP has a "STARTTLS" command
  - s_client is not usable for these

SSH

SSH Uses a Simple Solution to man-in-the-middle

- The first time you connect to a remote host, remember its public key
  - Stored in ~/.ssh/known_hosts
- The next time you connect, if the remote key is different, then maybe an attacker is intercepting the connection!
  - Or maybe the remote host has just got a new key, e.g. after a reinstall. But it's up to you to resolve the problem
- Relies on there being no attack in progress the *first* time you connect to a machine
- Connect on LAN *before* travelling with laptop

SSH Can Eliminate Passwords

- Use public-key cryptography to prove who you are
- Generate a public/private key pair locally
  - ssh-keygen -t rsa
  - Private key is ~/.ssh/id_rsa
  - Public key is ~/.ssh/id_rsa.pub
- Install your PUBLIC key on remote hosts
  - mkdir ~/.ssh
  - chmod 755 ~/.ssh
  - Copy public key into ~/.ssh/authorized_keys
- Login!

Notes on SSH Authentication

- Private key is protected by a passphrase
  - So you have to give it each time you log in
  - Or use "ssh-agent" which holds a copy of your passphrase in RAM
- No need to change passwords across dozens of machines
- Disable passwords entirely!
  - /etc/ssh/sshd_config
- Annoyingly, for historical reasons there are <u>three</u> different types of SSH key
  - SSH1 RSA, SSH2 DSA, SSH2 RSA

PGP/GPG – Pretty Good Privacy

PGP Takes a Different View

- We don't trust anyone except our friends (especially not big corporate monopolies)
- You sign your friends' keys to vouch for them
- Other people can choose to trust your signature as much as they trust you
- Generates a distributed "web of trust"
- Sign someone's key when you meet them face to face - "PGP key signing parties"

Summary

Designing a Good Cryptosystem is Very Difficult

- Many possible weaknesses and types of attack, often not obvious
- DON'T design your own!
- DO use expertly-designed cryptosystems which have been subject to widespread scrutiny
- Understand how they work and where the potential weaknesses are
- Remember the other weaknesses in your systems, especially the human ones

Where can you apply these cryptographic methods?

- At the link layer
  PPP encryption
- At the network layer
  IPSEC
- At the transport layer
  TLS (SSL): many applications support it
- At the application layer
  SSH: system administration, file transfers
  PGP/GPG: for securing E-mail messages, stand-alone documents, software packages etc.
  Tripwire (and others): system integrity checks

Start Using Cryptography Now!

- Use ssh exclusively for system administration. Disable telnetd everywhere.
- Use scp/sftp exclusively for file transfers. Disable ftpd everywhere
  - Allowable exceptions: public FTP servers; customer web server uploads
- Install pop3/imap/smtp servers with TLS support, and encourage your clients to use it
- Use HTTPS for any web application where users enter passwords or confidential data
  - e.g. webmail, databases

Any questions?

Exercises: What's Running?

Let's use a few tools to see what network services are running.

- netstat
- sockstat
- lsof

netstat -- show network status

```
# netstat -an -f inet
# netstat -a -f inet
# man netstat
```

(*play with the command for a bit...*)

Exercises: sockstat & lsof

<u>sockstat</u> -- list open sockets

```
# sockstat -4
# man sockstat
```
(*play with the command for a bit…*)

<u>lsof</u> – list open files (not installed by default)

"lsof is a utility typically installed on Linux distributions. We'll need to install it first."

```
# portinstall lsof
```
(this might take a moment)

```
# lsof -i
# man lsof
```
(*play with the command for a bit…*)

Exercises: What else is running?

You've already done some of this...

In theory you should be able to do:

```
# ps auxwww | less
```

and know what *everything* is that is output. If you see something unexpected this might be a security issue.

To dig deeper you can use:

```
# sockstat
# fstat
```

We discuss this in class

What was the point?

You should know a few basic things about your system. These commands help you to:

- Know what network services are running.
- Know now they are running (accepting connections, exposed externally, etc.)
- Know others are actively using them.
- Know all processes that are running.
- Know what resources are being used.

This is *basic* knowledge when trying to secure your system.